Sixteenth Greater Cincinnati Regional Science Bowl
Feb. 3, 2007
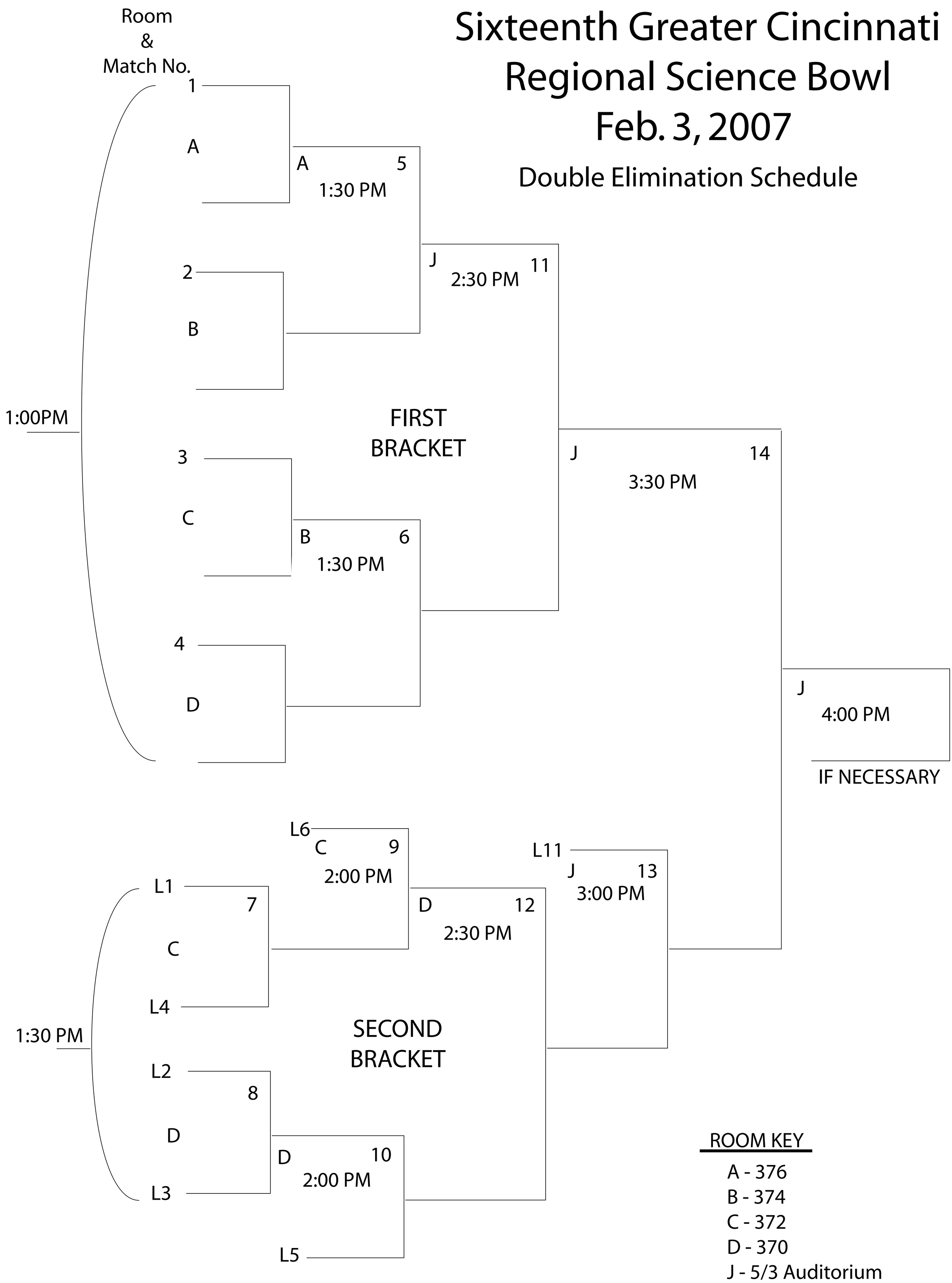
Double Elimination Schedule